ICAS	**TECHNICAL SPECIFICATIONS WIREHOOD**	Doc. Nr.: 4BNEMI8L REV 03 ING 19.03.26
		Revision: 03 — Pag.1/1

FINISHED PRODUCT

CUSTOMER: **BERLIN PACKAGING UK LTD**
ICAS Product code: **4BNEMI8L**
Customer Product code: **WH1987**

DIMENSIONAL CHARACTERISTICS

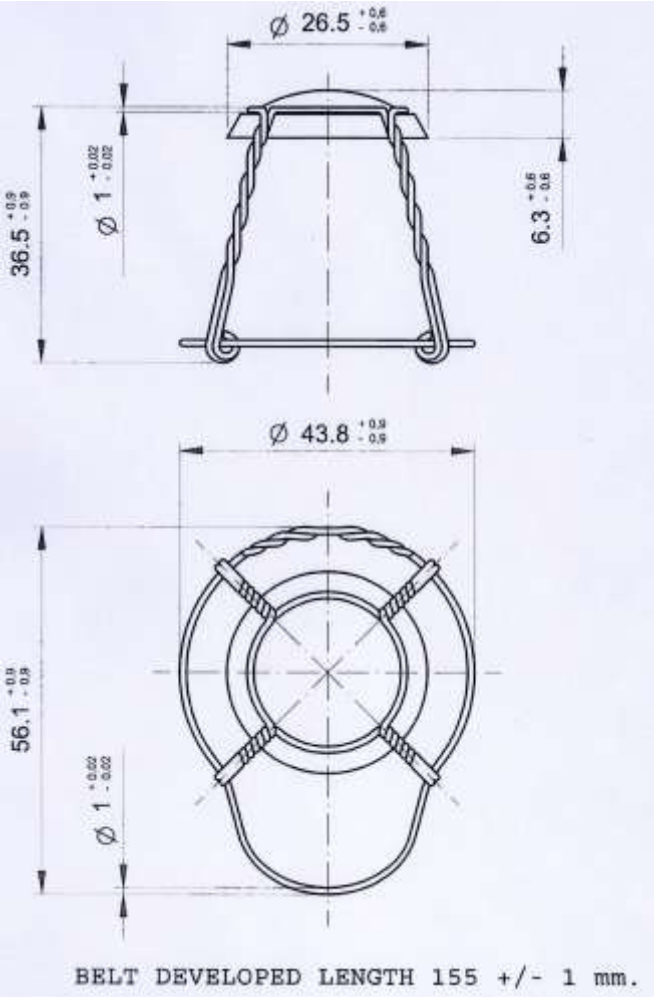

WIREHOOD MINI
FOOD SAFETY
Produced in accordance with GMP (Good Manufacturing Practices);
MATERIAL CODE FOR DISPOSAL: FE 40

PACKAGING

SPI 44

RAW MATERIAL

Body and belt wire:

- **MATERIAL AND APPLICATION FIELD**: Galvanized mild steel wire for the production of wirehoods
- **PURITY:** Minimum 99.5% of pure zinc
- **ZINC COATING:** Min. 35g/m2
- **THICKNESS OF LACQUER COAT:** min. 10 µm
- **DIAMETER**: 1.00 mm ± 0.02
- **BREAKING POINT**: 320-450 N/mm^2 (determined according to ISO 6892-1)
- **ELONGATION**: minimum 16% (length of sample: 150 mm/ determined according to ISO 6892-1)
- **TWISTS ON DOUBLE WIRE**: minimum 44 (length of sample: 210 mm)

COLOUR OF THE WIRE: BLACK

Disc:

- **MATERIAL**: Electrolytic tin-plated metal sheet
- **QUANTITY OF NOMINAL TIN**: 2,8 gr/m^2(min. 2,3 gr/ m^2) on both surfaces
- **HARDNESS OF THE MATERIAL**: scale TS260-TS275
- **THICKNESS**: 0.225 mm ± 0.01
- **TYPE OF PRINT**: Offset or digital.

Diameter: 30,5 mm

The colors you see are purely indicative